ARGIA Wall Basin/Bath Mixer Set 180 Curved Spout Lead Free

LUCENT®

Product Specifications

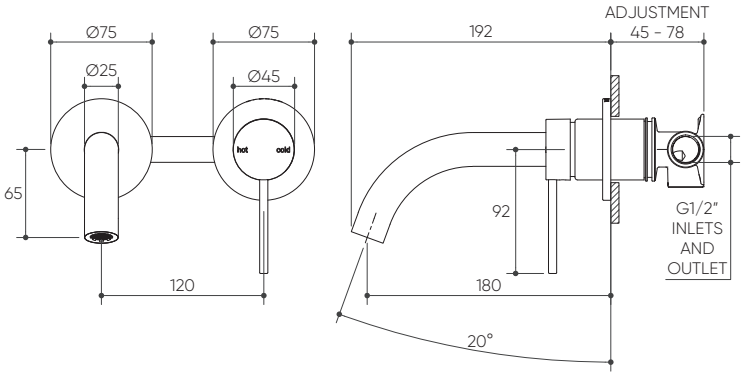

Specifications

Temperature Rating: 1-75°C

Pressure Rating: 150 - 1000kPa

Available In

BG	GM	MB	BN
Brushed Gold PVD	Gun Metal PVD	Matte Black Electroplated	Brushed Nickel PVD
11009PBG	11009PGM	11009PMB	11009PBN

Features

Complete Kit Includes Rough-In Kit and Fit-Off Kit

Easily Update Mixer Design and/or Finish with Any Style Switch Mixer Collection

Free-Flow Aerator Included in Box for Bath Installation

High Quality, Solid Brass Backplates

Lead Free
AS 3718
Lic 2502

20 YEAR WARRANTY

The more stars the more water efficient
WATER RATING
www.waterrating.gov.au
6.0 litres per minute
In accordance with AS/NZS 6400
Licence No. 0049
Austworld

For more information, contact:
Lucent, 15 Activity Crescent, Molendinar, Queensland 4214 Australia

P. 1300 474 714 E. info@lucentdesigns.com.au

All rights reserved 2024 Lucent. The images shown are for illustration purposes only and may not be an exact representation of the product. Modifications and adjustments may occur over time and the product should be used to confirm marking out and/or rough in as line drawings shown may vary from the item supplied over time. All measurements are in Millimetres and Colours are indicative and may vary from the images shown.
Commercial and residential warranties may differ. Please refer to our website for full terms and conditions. https://lucentdesigns.com.au/pages/warranty